CKM PISTON SERVICE KIT

INSTALLATION GUIDE

320303



Part No. 210516
Revision Date 17/10/2017
Copyright © 2013 by ARB Corporation Limited

IMPORTANT:

CAREFULLY READ THE ALL OF THE FOLLOWING INSTRUCTIONS TO ENSURE THAT THE CKM PISTON SERVICE KIT IS CORRECTLY INSTALLED AND OPERATING NORMALLY.

CKM Piston Service Kit

ITEM #	QTY	DESCRIPTION	PART #
08	1	BARREL	320201
09	1	PISTON ASSEMBLY	320103
10	1	AXLE, TO SUIT M6 SCREW	320232
10		AXLE, TO SUIT M5 SCREW	320203
*	2	WIRE RING DIN7993 RW-14	6151767
11	1	CAP SCREW (M6 X 25mm)	200718
11		CAP SCREW (M5 X 20mm)	200711
*	1	INSTALLATION GUIDE	210511

* *Not illustrated in exploded view.*

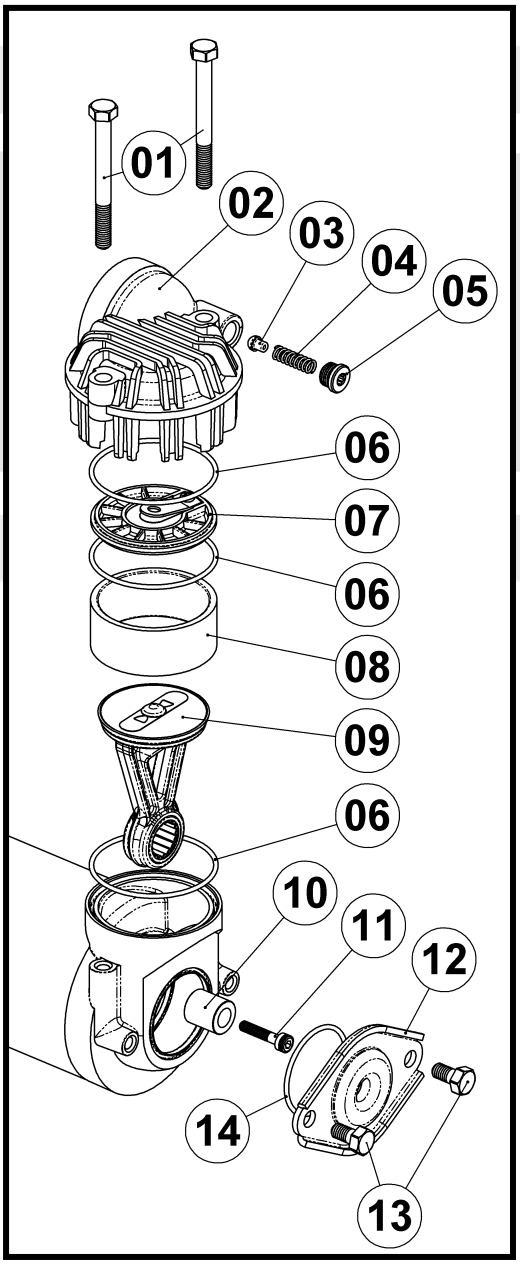

Piston Removal

1. **Unscrew the air filter assembly. Remove air filter flange bolts (13), air filter flange (12) and O-ring (14).**
2. **Remove head bolts (01) and head assembly (02). On CKMA models the bolts securing the manifold support bracket will also need to be removed.**
3. **Remove the BARREL (08). Place a screwdriver under the head of the piston as shown in Fig.1. This will stop the piston from moving through a full stroke.**
4. **Heat the CAP SCREW (11) using a micro torch to release the thread lock.**
5. **Unscrew the CAP SCREW in an anti-clockwise direction and extract it along with the AXLE (10).**
6. **Lift the PISTON ASSEMBLY (09) from the compressor motor.**
7. **Discard the PISTON ASSEMBLY, BARREL, AXLE and CAP SCREW.**

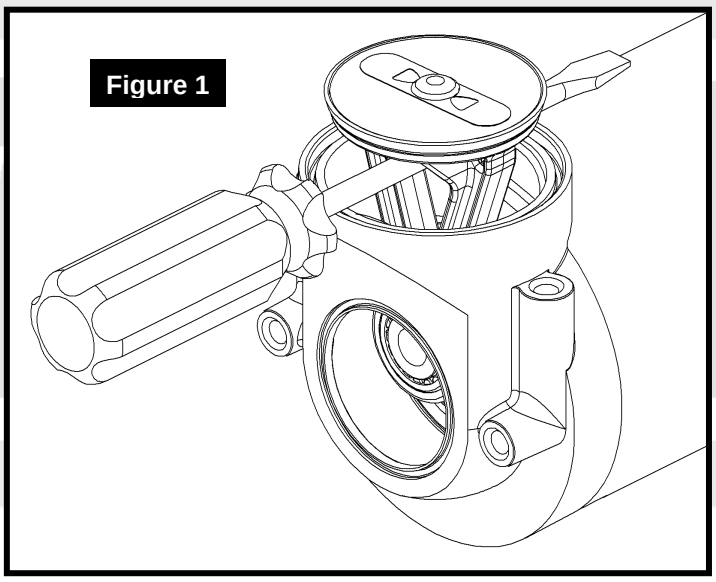

Piston Installation

8. **Ensure the pocket that the AXLE sits in is clean and free from damage.**
9. **With the new PISTON ASSEMBLY (09) and BARREL (08) assembled together, put them in place on the compressor motor.**

NOTE: **Be careful not to damage to the piston seal. The seal forms a cup shape and must be assembled into the barrel in the correct direction. Place the bearing end of the piston into the barrel first then pull the piston into the barrel as shown in Fig. 2.**

10. **Align the piston bearing and, holding the AXLE (10) by the wire ring end, insert the AXLE through the bearing so that it seats firmly into the pocket in the motor.**
11. **Apply high temperature thread lock (ie. Loctite 272) to the CAP SCREW (11). Insert the screw through the AXLE (10) into the motor and tighten by hand.**
12. **Using a torque wrench, tighten the M6 CAP SCREW to 12.0Nm (8.9 ft-lb) or the M5 CAP SCREW to 10.0Nm (7.4 ft-lb). Use the same technique with the screwdriver as in step 3 to prevent the piston from moving through a full stroke.**
13. **Re-assemble the remaining components by reversing steps 1 and 2.**
14. **Allow 120 minutes fixture time for the thread lock before running the compressor.**

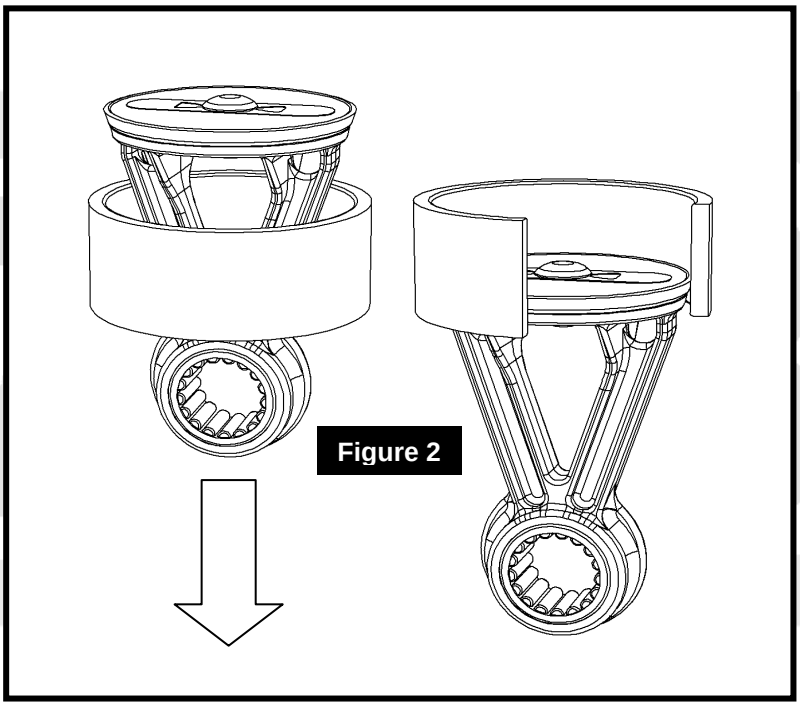

Figure 2